APPENDIX L – Archival Plans of Deputy Mine Manager's Residence and Coal Chute

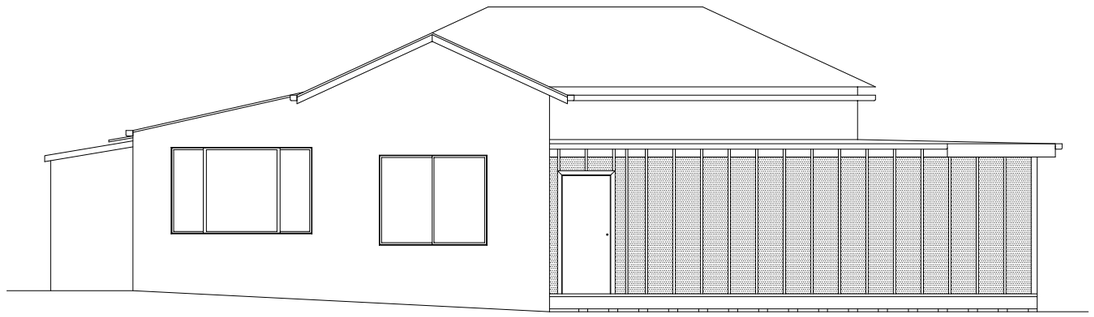

EAST ELEVATION

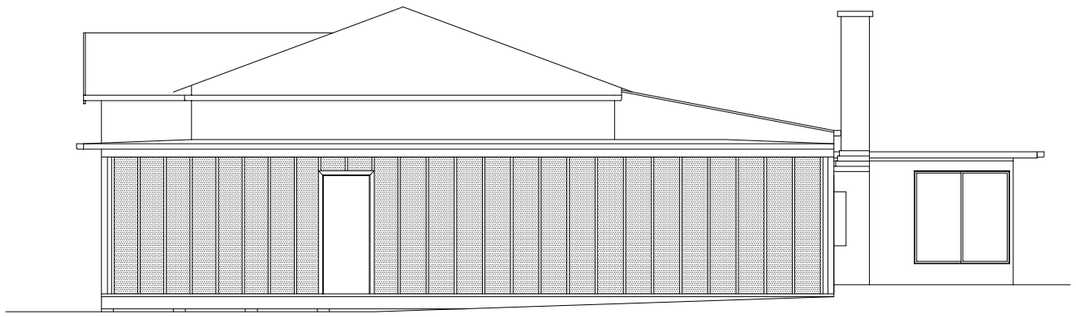

NORTH ELEVATION

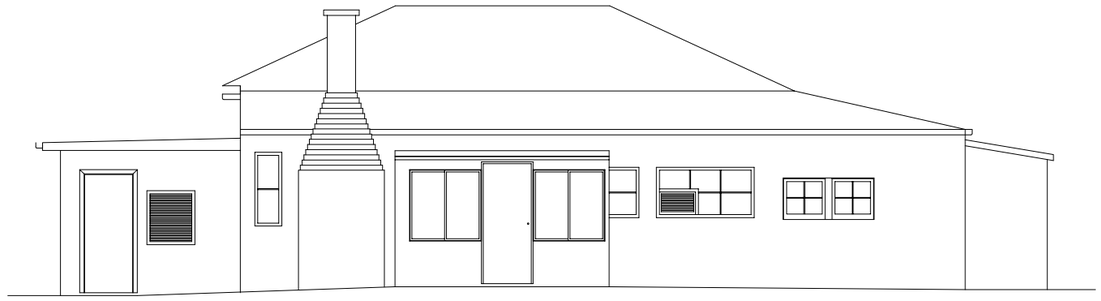

WEST ELEVATION

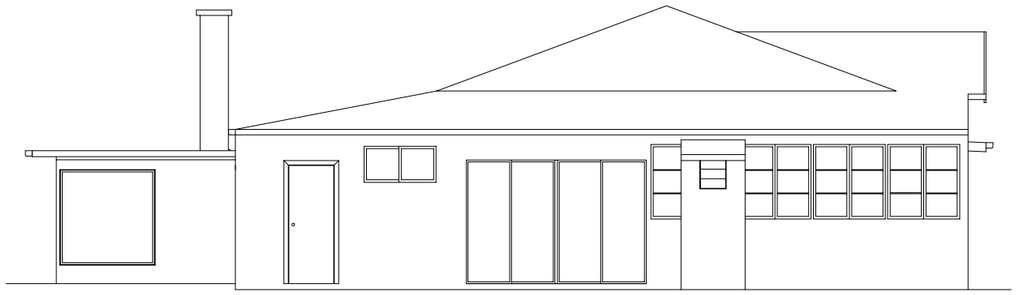

SOUTH ELEVATION

DIMENSIONS IN mm

REV	GRID	DETAILS	BY	APP	DATE
A		PRELIMINARY ISSUE	NT		19.4.12

advitech
Newcastle, Australia
Email: mail@advitech.com.au
Website: http://www.advitech.com.au
TEL.:(02) 4924-5400
FAX.:(02) 4967-3772

ITEM	No. OFF	PART No.	DESCRIPTION	NOTE

DRAWN NT	DATE 19.04.2102	WERRIS CREEK COAL P/L DEPUTY MANAGER RESIDENCE ELEVATIONS	
CHKD	DATE		
ENG CHKD	DATE		
ENG APP'D	DATE		
CAD FILE No. 11849002-A		SCALE 1:100	SHEET SIZE A3
		DRAWING No. 11849002	REV A

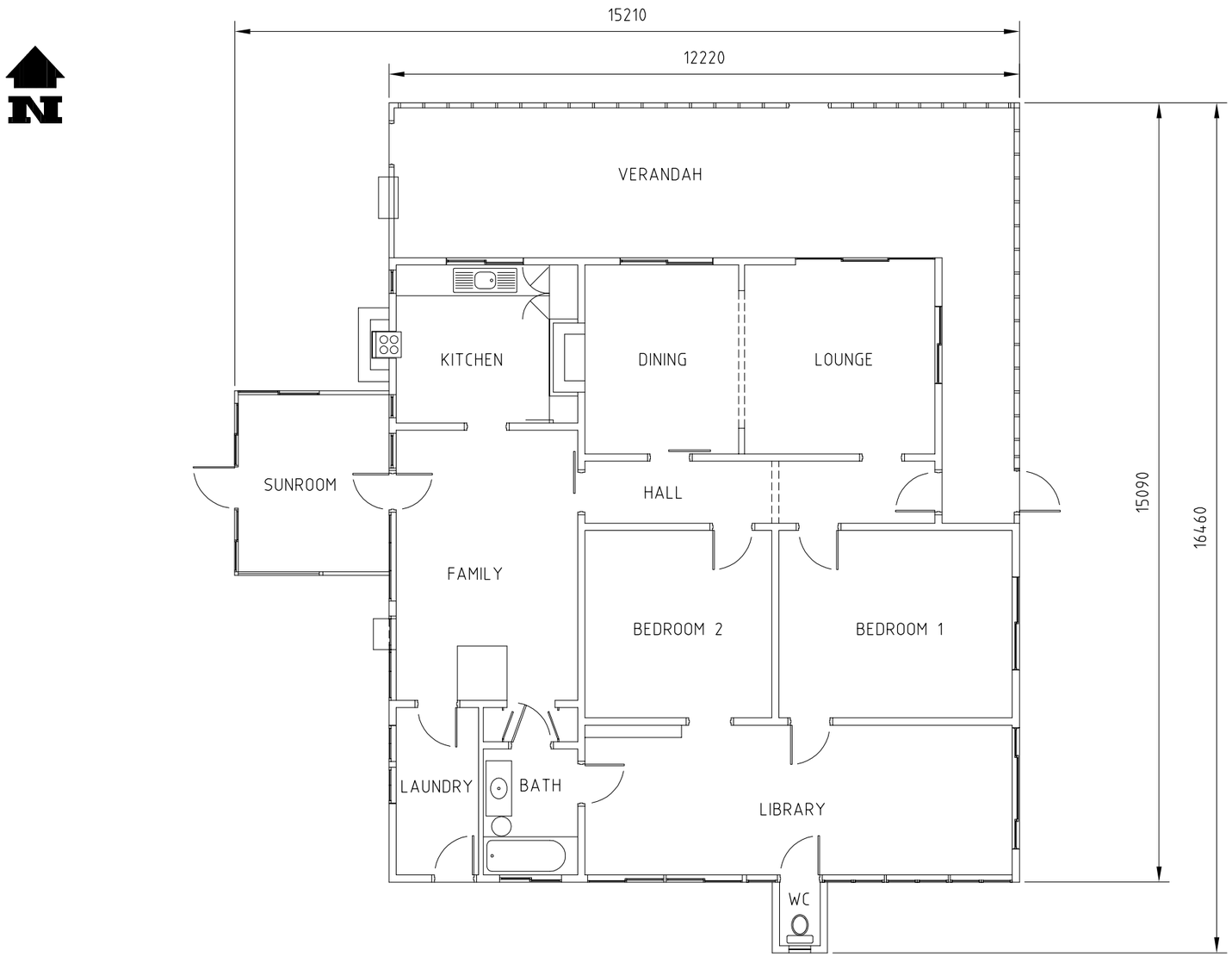

FLOOR PLAN

DIMENSIONS IN mm

REV	GRID	DETAILS	BY	APP	DATE
A		PRELIMINARY ISSUE	NT		19.4.12

advitech
Newcastle, Australia
Email: mail@advitech.com.au
Website: http://www.advitech.com.au
TEL.:(02) 4924-5400
FAX.:(02) 4967-3772

ITEM	No. OFF	PART No.	DESCRIPTION	NOTE

DRAWN NT	DATE 20.04.2012
CHKD	DATE
ENG CHKD	DATE
ENG APP'D	DATE
CAD FILE No. 11849001-A	

WERRIS CREEK COAL P/L
DEPUTY MANAGER RESIDENCE
PLAN

SCALE	SHEET SIZE	DRAWING No.	REV
1:100	A3	11849001	A

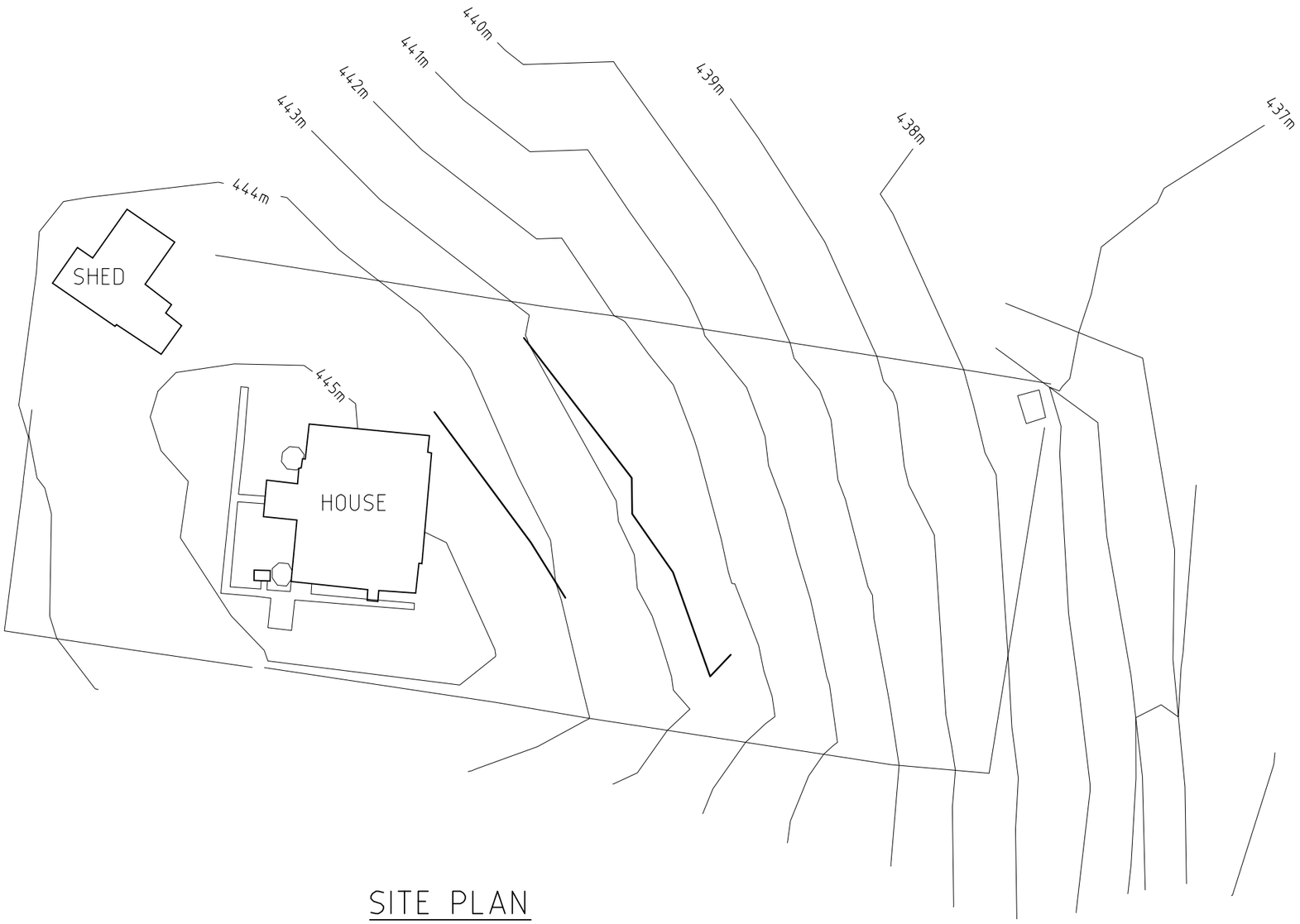

SITE PLAN

DIMENSIONS IN mm

REV	GRID	DETAILS	BY	APP	DATE
A		PRELIMINARY ISSUE	NT		19.4.12

advitech
Newcastle, Australia
Email: mail@advitech.com.au
Website: http://www.advitech.com.au
TEL.(02) 4924-5400
FAX.(02) 4967-3772

ITEM	No. OFF	PART No.	DESCRIPTION	NOTE

DRAWN NT	DATE 19.04.2012	WERRIS CREEK COAL P/L DEPUTY MANAGER RESIDENCE SITE PLAN	
CHKD	DATE		
ENG CHKD	DATE		
ENG APP'D	DATE	SCALE 1:500	SHEET SIZE A3
CAD FILE No. 11849003-A		DRAWING No. 11849003	REV A

REV	REVISIONS	DATE

HORIZON SURVEYING PTY LTD
PO BOX 701, SINGLETON NSW 2330
TEL.(02) 6577 3215 FAX: (02) 6577 3216

QUALITY RECORD

REVIEW	NAME	SIGNATURE	DATE
DRAWN	MCGARINEE		23 6 12
DWG CHECKED			
DESIGNER			
DESIGN CHECKED			

SCALE: See Grid

WHITEHAVEN

FILE REF: 0012- Aerial dim new 2 xrefs.dwg

PLOT FILE: 0012- Aerial dim new 2 xrefs.ctb

JOB REF: 3015

ORIG. FILE SIZE: A1

WERRIS CREEK MINE

COAL CHUTE LOCATION PLAN

DRAWING NO.: BCIS- 15963

REV

THIS SCALE FULL SIZE ON ORIGINAL DRAWING MILLIMETERS

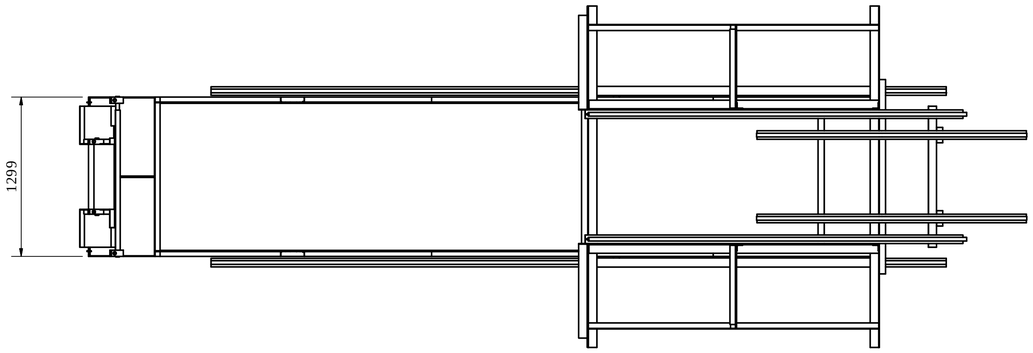

PLAN VIEW

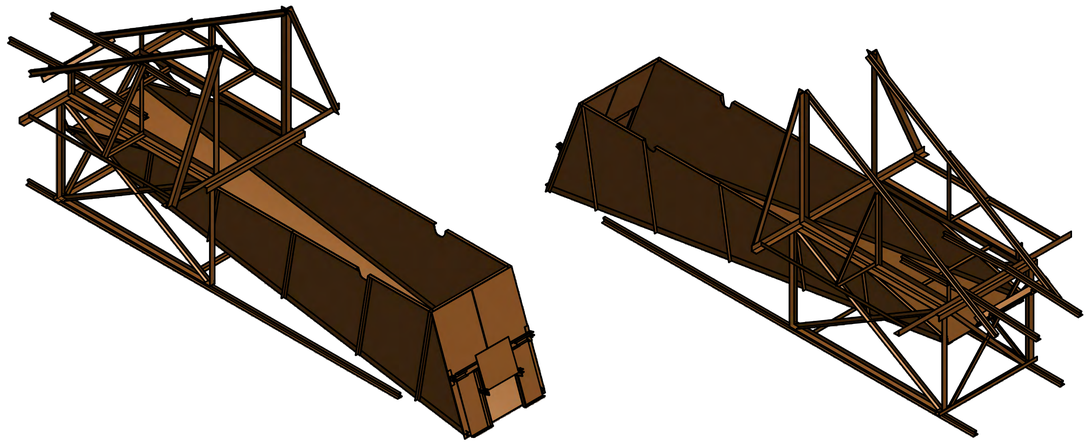

ISOMETRIC VIEWS

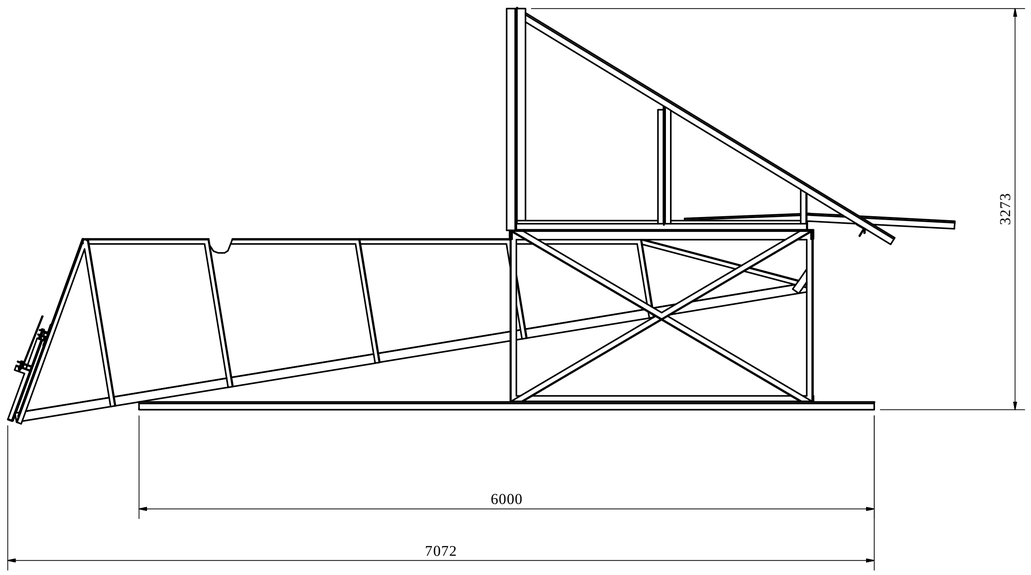

ELEVATION

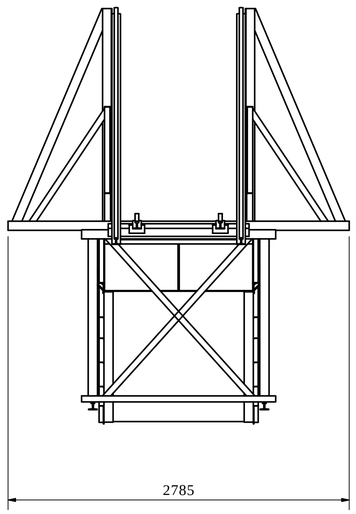

SIDE VIEW

ISSUED
FOR REFERENCE
19/06/2012

NOT FOR CONSTRUCTION

REV	GRID	DETAILS	BY	APP	DATE
B		ADDED FLOOR PLATE TO CHUTE	ML	SW	19/06/2012
A		ISSUED FOR REFERENCE	ML	SW	18/06/2012

advitech
Newcastle Australia
Email: mail @ Advitech.com.au
Website.http//www.advitech.com.au
TEL. (02)4924-5400
Fax. (02)4967-3772

DRAWN M.LEONARD	Date 18/06/2012	
CHKD	Date	
ENG. APP'D	Date	
CLIENT APP'D	Date	
CAD FILE No. 11849-0001	DIMENSIONS IN mm	

WERRIS CREEK COAL MINE
COAL CHUTE
HERITAGE REFERENCE DRAWING

SCALE	SHEET SIZE	DRAWING No.	REV
NTS	A1	11849-0001	B

APPENDIX M – AHIMS Register Extensive Search Results

Office of Environment & Heritage NSW

AHIMS Web Services (AWS)

Extensive search - Site list report

Your Ref Number : ADV Werris Creek 1km

Client Service ID : 72314

SiteID	SiteName	Datum	Zone	Easting	Northing	Context	Site Status	SiteFeatures	SiteTypes	Reports
29-2-0005	Narrawolga:	AGD	56	274800	6523300	Open site	Valid	Grinding Groove : -	Axe Grinding Groove	

Contact	Recorders	Quirindi District Historical Society	Permits

Report generated by AHIMS Web Service on 13/06/2012 for Sam Wood for the following area at Datum :GDA, Zone : 56, Eastings : 275250 - 275270, Northings : 6523610 - 6523640 with a Buffer of 1000 meters.Additional Info : appendix in MP. Number of Aboriginal sites and Aboriginal objects found is 1

This information is not guaranteed to be free from error omission. Office of Environment and Heritage (NSW) and its employees disclaim liability for any act done or omission made on the information and consequences of such acts or omission.

Page 1 of 1

APPENDIX N – Cultural Heritage Risk Assessments

Task Step/ Activity	Hazard	Causes	Existing Controls	Current Risk			Additional Controls	Residual Risk		
				C	L	R		C	L	R
Aboriginal Heritage	Damage to known Aboriginal heritage site	Unauthorised access Vehicle interaction	No known artefacts found onsite; Approved Heritage Management Plan & Training.	2	D	L	Relocate Narrawolga Axe Grinding Groove Offsite to Willow Tree Visitor Information Centre and remove WCC responsibility	1	E	L
Aboriginal Heritage	Damage to unknown Aboriginal heritage site	Vehicle interaction Vegetation Clearing Soil stripping	No known artefacts found onsite; Approved Heritage Management Plan & Training.	1	E	L	None	1	E	L
Historical Heritage	Damage to Former Undergrou nd Colliery heritage items	Blasting & Mining Operations Unauthorised access Vehicle interaction	No known heritage items found onsite; Approved Heritage Management Plan & Training.	1	E	L	None	1	E	L

APPENDIX O – Narrawolga axe grinding groove site locations

WERRIS CREEK COAL PTY LTD - WERRIS CREEK MINE
ABORIGINAL SITE LOCATIONS
SURVEYED: 18/12/2006

Point	Easting	Northing	RL	Code
1	275262.406	6523640.487	398.419	1A
2	275262.521	6523640.192	398.453	1A
3	275262.471	6523640.2	398.441	1B
4	275262.315	6523640.56	398.413	1B
5	275262.267	6523640.559	398.405	1C
6	275262.389	6523640.151	398.451	1C
7	275262.345	6523640.154	398.451	1D
8	275262.145	6523640.536	398.406	1D
9	275262.084	6523640.529	398.409	1E
10	275262.276	6523640.152	398.435	1E
11	275262.205	6523639.982	398.426	1F
12	275261.938	6523640.194	398.402	1F
13	275263.254	6523639.526	398.411	01R1
14	275262.733	6523640.869	398.334	01R1
15	275262.22	6523640.947	398.387	01R1
16	275261.603	6523640.62	398.337	01R1
17	275261.621	6523639.618	398.304	01R1
18	275262.018	6523639.159	398.327	01R1
19	275262.484	6523638.879	398.388	01R1
20	275262.21	6523628.278	397.368	2A
21	275262.474	6523627.946	397.337	2A
22	275262.48	6523627.518	397.3	2B
23	275262.268	6523627.77	397.325	2B
24	275262.194	6523627.765	397.325	2C
25	275262.299	6523627.603	397.299	2C
26	275262.426	6523627.466	397.298	2C
27	275262.093	6523627.663	397.339	2D
28	275262.001	6523628.067	397.386	2D
29	275261.715	6523628.508	397.404	01R2
30	275262.005	6523628.617	397.387	01R2
31	275262.379	6523628.33	397.357	01R2
32	275262.851	6523627.33	397.235	01R2
33				
34	275262.666	6523627.251	397.228	01R2
35	275262.022	6523627.531	397.313	01R2
36	275261.716	6523628.488	397.395	01R2
37	275262.516	6523626.938	397.226	3A
38	275262.76	6523626.735	397.22	3A
39	275262.651	6523626.856	397.211	3A
40	275262.574	6523627.072	397.213	01R3
41	275262.417	6523626.972	397.199	01R3
42	275262.685	6523626.647	397.193	01R3
43	275262.797	6523626.718	397.21	01R3
44	275262.688	6523626.925	397.199	01R3
45				
46	275263.195	6523627.032	397.253	4A
47	275263.33	6523626.849	397.226	4A
48	275263.467	6523626.676	397.23	4A

49	275263.477	6523626.58	397.228	4B
50	275263.566	6523626.331	397.219	4B
51	275263.241	6523626.848	397.235	4C
52	275263.398	6523626.646	397.229	4C
53	275263.285	6523626.681	397.228	4D
54	275263.452	6523626.516	397.228	4D
55	275263.41	6523626.397	397.221	4E
56	275263.188	6523626.792	397.24	4E
57	275263.104	6523626.776	397.239	4F
58	275263.246	6523626.563	397.23	4F
59	275263.096	6523626.729	397.23	4G
60	275263.24	6523626.397	397.225	4G
61	275262.868	6523626.906	397.248	4H
62	275263.083	6523626.455	397.208	4H
63	275263.13	6523627.379	397.227	01R4
64	275262.714	6523627.223	397.208	01R4
65	275262.939	6523626.43	397.191	01R4
66	275263.382	6523625.719	397.128	01R4
67	275263.875	6523625.56	397.131	01R4
68	275263.989	6523625.751	397.097	01R4
69	275263.925	6523626.02	397.128	01R4
70	275263.301	6523627.187	397.251	01R4
71	275264.358	6523624.039	396.987	5A
72	275264.56	6523623.805	396.964	5A
73	275264.281	6523624.035	396.976	5B
74	275264.572	6523623.665	396.945	5B
75	275264.483	6523623.61	396.945	5C
76	275264.269	6523623.924	396.962	5C
77	275264.532	6523623.513	396.942	5D
78	275264.691	6523623.288	396.932	5D
79	275264.225	6523624.378	396.955	01R5
80	275265.089	6523623.412	396.893	01R5
81	275264.7	6523622.997	396.869	01R5
82	275264.256	6523623.136	396.872	01R5
83	275263.725	6523623.863	396.926	01R5
84	275263.514	6523624.591	396.986	01R5
85	275264.38	6523624.69	396.932	01R5
86	275269.112	6523609.873	395.695	6A
87	275269.292	6523609.601	395.625	6A
88	275269.253	6523609.625	395.631	6B
89	275269.43	6523609.389	395.62	6B
90	275269.73	6523609.93	395.658	01R6
91	275269.858	6523609.65	395.623	01R6
92	275269.754	6523609.47	395.599	01R6
93	275269.376	6523609.263	395.553	01R6
94	275269.131	6523609.366	395.613	01R6
95	275268.945	6523609.682	395.645	01R6
96	275269.038	6523609.993	395.702	01R6
97	275269.4	6523610.085	395.733	01R6
98	275269.659	6523610.069	395.705	01R6
99	275262.044	6523620.702	396.685	7A
100	275261.932	6523621.009	396.717	7A
101	275261.888	6523621.107	396.722	7B
102	275261.889	6523620.851	396.689	7B
103	275261.931	6523620.577	396.667	7B
104	275262.217	6523620.493	396.622	01R7

105	275262.113	6523620.892	396.637	01R7
106	275261.956	6523621.16	396.692	01R7
107	275261.796	6523621.161	396.689	01R7
108	275261.679	6523621.065	396.686	01R7
109	275261.743	6523620.751	396.682	01R7
110	275261.943	6523620.542	396.648	01R7
111	275262.075	6523620.51	396.64	01R7
112	275256.362	6523620.434	396.544	8A
113	275256.281	6523620.181	396.512	8A
114	275256.481	6523620.468	396.552	8B
115	275256.352	6523620.077	396.485	8B
116	275256.389	6523620.026	396.488	8C
117	275256.543	6523620.449	396.55	8C
118	275256.63	6523620.413	396.555	8D
119	275256.54	6523620	396.484	8D
120	275256.684	6523620.417	396.531	8E
121	275256.688	6523620.237	396.522	8E
122	275256.73	6523620.133	396.521	8E
123	275256.745	6523620.009	396.496	8E
124	275256.841	6523620.084	396.51	8F
125	275256.767	6523619.712	396.447	8G
126	275257.073	6523620.974	396.491	01R8
127	275257.369	6523620.773	396.427	01R8
128	275257.529	6523620.159	396.401	01R8
129	275257.499	6523619.533	396.387	01R8
130	275257.061	6523619.346	396.322	01R8
131	275256.254	6523619.587	396.327	01R8
132	275255.948	6523620.228	396.365	01R8
133	275256.076	6523620.562	396.41	01R8
134	275256.717	6523620.827	396.487	01R8
135	275254.271	6523626.727	397.242	9A
136	275254.407	6523626.565	397.202	9A
137	275254.112	6523626.739	397.246	9B
138	275254.354	6523626.413	397.183	9B
139	275254.286	6523626.35	397.178	9C
140	275254.082	6523626.681	397.237	9C
141	275253.82	6523627.67	397.215	01R9
142	275254.217	6523627.298	397.201	01R9
143	275254.532	6523626.812	397.172	01R9
144	275254.632	6523626.483	397.157	01R9
145	275254.29	6523626.117	397.014	01R9
146	275253.941	6523626.253	397.106	01R9
147	275253.487	6523626.615	397.154	01R9
148	275253.112	6523627.035	397.108	01R9
149	275253.194	6523627.493	397.228	01R9
150	275253.551	6523627.645	397.222	01R9
151	275272.573	6523607.104	395.373	NS
152	275277.868	6523600.718	394.886	NS
153	275273.708	6523597.88	394.385	NS
154	275265.478	6523593.505	393.4	NS
155	275258.694	6523590.259	392.665	NS
156	275253.776	6523596.534	393.35	NS
157	275260.338	6523600.077	394.189	NS
158	275265.19	6523606.031	395.163	NS
159	275259.006	6523608.917	395.242	NS
160	275253.628	6523604.328	394.248	NS

161	275246.575	6523607.734	394.071	NS
162	275252.161	6523610.76	395.021	NS
163	275256.86	6523614.146	395.767	NS
164	275252.509	6523621.418	396.365	NS
165	275247.537	6523618.586	395.768	NS
166	275242.241	6523615.968	394.896	NS
167	275237.621	6523625.071	395.897	NS
168	275244.35	6523627.204	396.682	NS
169	275250.373	6523627.507	397.007	NS
170	275249.055	6523636.556	397.972	NS
171	275240.967	6523634.663	397.379	NS
172	275234.082	6523632.071	396.566	NS
173	275232.834	6523639.079	396.875	NS
174	275238.954	6523635.902	397.332	NS
175	275235.422	6523641.909	397.551	NS
176	275238.487	6523646.726	398.319	NS
177	275240.893	6523647.617	398.747	NS
178	275243.352	6523642.382	398.365	NS
179	275254.255	6523641.51	398.455	NS
180	275249.973	6523647.232	398.893	NS
181	275245.674	6523653.605	399.397	NS
182	275254.85	6523656.624	399.572	NS
183	275258.126	6523648.091	398.992	NS
184	275259.88	6523642.649	398.548	NS
185	275264.675	6523642.498	398.321	NS
186	275265.394	6523649.543	398.74	NS
187	275262.967	6523655.953	399.255	NS
188	275271.36	6523654.436	398.842	NS
189	275273.665	6523647.078	398.204	NS
190	275266.854	6523642.52	398.224	NS
191	275268.779	6523634.71	397.722	NS
192	275273.957	6523637.028	397.529	NS
193	275278.082	6523628.385	396.83	NS
194	275284.962	6523618.644	395.996	NS
195	275289.767	6523610.549	395.344	NS
196	275291.774	6523602.12	394.968	NS
197	275290.588	6523595.443	394.691	NS
198	275287.062	6523602.884	395.192	01ROCOUT
199	275287.45	6523604.153	395.326	01ROCOUT
200	275286.367	6523603.926	395.819	01ROCOUT
201	275285.917	6523603.271	395.233	01ROCOUT
202	275282.017	6523610.811	395.791	01ROCOUT
203	275281.82	6523612.792	396.459	01ROCOUT
204	275282.415	6523613.001	395.876	01ROCOUT
205	275277.152	6523622.578	396.644	01ROCOUT
206	275276.102	6523621.582	397.128	01ROCOUT
207	275274.762	6523621.354	396.735	01ROCOUT
208	275268.943	6523630.706	397.633	01ROCOUT
209	275269.245	6523630.937	397.838	01ROCOUT
210	275269.76	6523631.326	397.529	01ROCOUT
211	275264.752	6523639.33	398.175	01ROCOUT
212	275264.228	6523637.408	398.573	01ROCOUT
213	275263.823	6523636.42	397.944	01ROCOUT
214	275260.201	6523643.702	398.639	01ROCOUT
215	275259.643	6523643.326	398.559	01ROCOUT
216	275260.587	6523643.903	398.572	01ROCOUT

217	275259.696	6523638.579	398.237	NS
218	275254.711	6523636.286	397.952	NS
219	275255.992	6523627.788	397.284	NS
220	275263.075	6523630.28	397.523	NS
221	275266.111	6523622.218	396.792	NS
222	275260.505	6523619.305	396.448	NS
223	275263.252	6523611.578	395.731	NS
224	275269.897	6523612.139	395.899	NS
225	275275.687	6523609.983	395.807	NS
226	275270.934	6523619.217	396.599	NS
227	275266.146	6523629.892	397.404	NS

APPENDIX P – Proforma for Quarterly Inspections

WHITEHAVEN	WHITEHAVEN GROUP	Document Owner:	ENV. MANAGER
		Revision Period:	3 Yearly
		Issue:	1
		Last Revision Date:	14/06/2012
		Date Printed:	14/06/2012

WHC_CHK_WC_Heritage Quarterly Inspection

Inspected By:		**Signature:**		
Date:	**For Quarter:**	**Site: Werris Creek Coal**		
Checklist Items		**Yes**	**No**	**Details**
Narrawolga Axe Grinding Groove Storage Area				
	1. Fencing and gate in good condition protecting the site?	☐	☐	
	2. Is the area (inside or outside) not overgrown with weeds or vegetation	☐	☐	
	3. Signage legible and visible?	☐	☐	
	4. Are the grooves undisturbed and intact?	☐	☐	
	5. The "grooved" rocks stable supported by crusher dust?	☐	☐	
Other Aboriginal Heritage Items	6. Other Aboriginal Heritage Items Identified?	☐	☐	
Historical Heritage Items				
	7. Coal Loading Shute not disturbed?	☐	☐	

APPENDIX Q – Training Induction Documentation

Aboriginal Cultural Heritage

- The Heritage Management Plan outlines the process for protecting known artefacts and future finds.
- If you discover something that may be an Aboriginal artefact or site you must stop work, cordon off the area and report the find to your Supervisor.
- Any area of cultural significance must be appropriately protected (ie. signage/ fencing) to ensure it is not damaged or destroyed. Fencing and reflective tags are in place across the site identifying known Aboriginal sites.
- If artefacts or sites need to be relocated, Whitehaven must receive approval from the government and Aboriginal groups prior to salvage.

WHITEHAVEN COAL

APPENDIX R – Awareness Posters

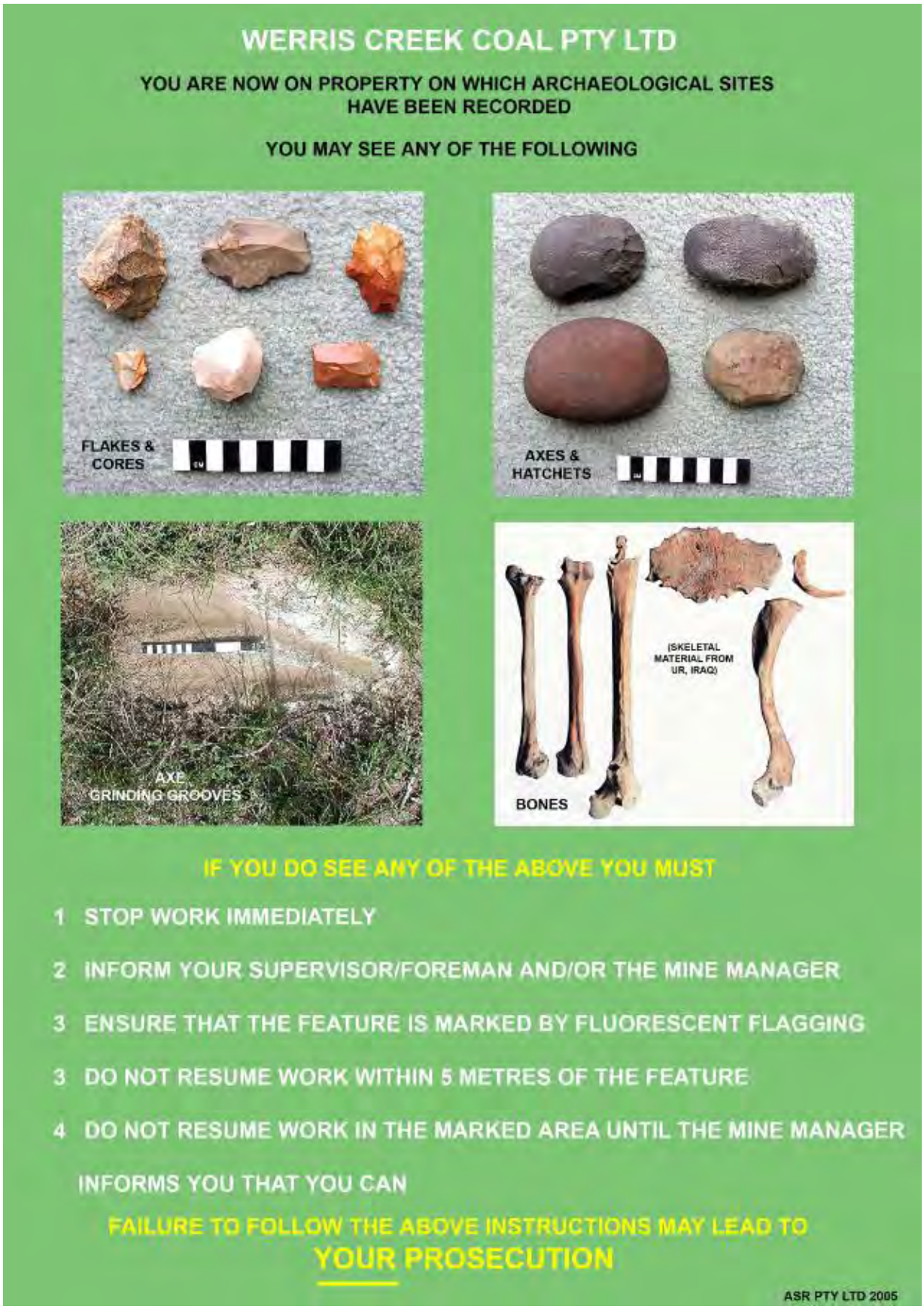

Aboriginal Heritage

- *National Parks and Wildlife Act 1974* (NPW Act)
- *Environmental Planning and Assessment Act* 1979**(EP&A)**
- *Heritage Act* 1977

The NSW Legislation protects:

- Any place of importance or significance connected with traditional cultural life.
- Any sacred, ritual or ceremonial site.
- Any place associated with Aboriginal people which is of interest.
- Any place where objects are traditionally stored, or have been taken or removed.

Aboriginal Heritage
These may include:
• Burial grounds
• Stone structures
• Symbols
• Arranged stones
• Objects
• Carved or scarred trees
• Paintings / Engravings
If you discover what appears to be something out of context that may be an Aboriginal artefact or site, you must stop work, cordon off the area and report it to your supervisor.
15 / 19

Aboriginal Heritage

Werris Creek Coal Mine

Typical rock outcrop occurring on the eastern and western sides of the coal reserves

A culturally significant site containing axe grinding grooves is located on these rocks which have been relocated for preservation.

Aboriginal Heritage

Werris Creek Coal Mine

Axe Grinding Grooves removed from the mining area to protect them.

Aboriginal Heritage
Werris Creek Coal Mine
Axe Grinding Grooves

Aboriginal Heritage
Werris Creek Coal Mine

Procedure for discovering a possible artefact or site:

1.Work will cease in the area of the discovery,

2.If the area of discovery is in deposited material then work will also cease in the area where the material has come from,

3.The person discovering the artefact or site will notify their supervisor who will ensure that work has ceased and the area is cordoned off.

4.The supervisor will notify the Senior Mining Official on site who will notify the Mine Manager

5.The Mine Manager will notify WCC management who will ;

a) Request a qualified archaeologist to attend the site and advise on its archaeological significance,

b) Request the Site Monitor for Nungaroo LALC, if not already present, to attend and advise on its cultural significance in consultation with the qualified archaeologist,

c) If (a) & (b) determine that the find is an artefact or site notify DEC with the information for advice on further actions.

The Mine Manager will implement the action plan provided by DEC.

APPENDIX S – Protocol for the HMP Review

Period of Review: **Date:** **Name:** **Signed:**

AQGHGMP Section	Clause	Compliant	Evidence/Comment	Recommendation
8.1.2	Rehabilitation • LOM rehabilitation target met			
8.1.3	Pre-stripping • Excess timber buried not burnt • Disturbed area kept to a minimum			
8.1.4	Dust Suppression – Water Carts • Water carts used to actively control dust emissions • Watering level of 2L/m2/hr achieved for haul roads			
8.1.5	Real Time Monitoring • TEOM installed			
8.1.6	Plant Operation • All operators trained and certified as competent to operate equipment			
8.1.7	Haul Roads • Sealed roads routinely sweeped • Unsealed roads routinely sheeted with local gravel			

AQGHGMP Section	Clause	Compliant	Evidence/Comment	Recommendation
8.1.8	Drilling • Water cart used to spray the surface of the drill site • Drill rigs utilise curtains, vacuum extraction and water sprays during operation			
8.1.9	Overburden and Interburden Excavation • Water carts used at excavator loading faces and dump sites • Extension of the out-of-pit overburden emplacement areas			
8.1.10	Blasting • Blasting limited to one blast per day (some exemptions) • Blasting limited to 9am to 5pm Monday to Saturday (excluding public holidays) • Blasting aimed to occur between 1pm and 2pm • Cast blasting used (where practicable)			
8.1.11	Water Sprays • Water sprays at conveyor transfer points			
8.1.12	Conveyors • Conveyors fitted with cleaning and collection devices • Conveyors are enclosed			
AQGHGMP Section	**Clause**	**Compliant**	**Evidence/Comment**	**Recommendation**

8.1.13	Off-site Coal Transportation • Loaded train wagons sprayed with water • Trucks not filled above gunnel level • Each tray tarped to cover loads			
8.1.14	Equipment and Plant Maintenance • Preventative maintenance undertaken on earthmoving equipment and trucks			
8.1.15	Acoustic and Visual Amenity Bund • Acoustic and Visual Amenity Bund constructed			
8.1.16	Pollution Reduction Program • Coal Mine Particulate Matter Control Best Practice Assessment completed • Results of assessment included into AQGHGMP			
8.1.17	Coal Stockpiles • Water carts used to spray coal stockpiles when needed • SAIL coal stockpile at Rail-Load-Out Facility covered with a tarp			

AQGHGMP Section	Clause	Compliant	Evidence/Comment	Recommendation
8.3.1	Energy Savings Action Plan • Review of air compressor system • Upgrade of crushing plant • Investigation into replacing semi-trailers with a conveyor system			
8.3.2	Energy Efficiency Opportunities • Replace existing five drills with two drills • Investigate or implement opportunities identified in the EEO Assessment • Update public report on website			
9	Air Quality Monitoring Program • Implement AQMP			
10.1	OCE Inspections • Inspections undertaken every shift of mining operations			
10.2	Offsite Visual Inspections • Routine offsite inspections undertaken			
10.3	Monitoring Equipment Maintenance • Routine inspections and maintenance of air quality monitoring network undertaken			

AQGHGMP Section	Clause	Compliant	Evidence/Comment	Recommendation
11	Training • Environmental training incorporated as part of the WCC training and competency management system (where practicable) • Additional training completed for employees/contractors involved in potential air polluting activities and those responsible for implementing management controls			
12	Reporting • Air quality monitoring and management reporting undertaken as required • Community complaints line maintained			
13.1	Management Plan Review • AQGHGMP review protocol completed annually • Outcomes of the review incorporated into the AEMR			
13.2	Air Quality Performance Review • Air quality performance review completed annually • Outcomes of the review incorporated into the AEMR			
13.3	Independent Environmental Audit • IEA undertaken every three years			

AQGHGMP Section	Clause	Compliant	Evidence/Comment	Recommendation
13.4	Revision of AQGHGMP • AQGHGMP revised in 2015, or earlier if required			
14	Contingency Plan • Unpredicted impacts managed in accordance with contingency plan			

APPENDIX T – Environmental Policy

WHITEHAVEN	WHITEHAVEN GROUP	Document Owner:	Managing Director
		Revision Period:	3 Yearly
		Issue:	3
		Last Revision Date:	29/10/12

WHC-POLICY-HEALTH, SAFETY & ENVIRONMENT

Whitehaven Coal intends to conduct business in a way that maintains a safe and healthy workplace for its workers visitors and the surrounding community, and protect the environment in all stages of exploration, project development and construction, mining, processing and train loading.

Whitehaven Coal aims to:

- Achieve zero workplace injuries and illnesses.
- Achieve zero plant and equipment damage.
- Achieve zero environmental incidents.

Whitehaven Coal will strive to achieve these goals by:

- Considering health, safety, welfare and environmental matters when planning and completing work activities.
- Consulting and communicating in a fair and effective manner regarding health, safety, welfare and environment matters.
- Having in place processes for identifying hazards and eliminating or minimising health, safety, welfare and environmental risks and impacts.
- Having in place processes for receiving and considering information regarding incidents, hazards, and risks and impacts, and responding to that information in a timely way, including learning's applied and shared.
- Working to improve safety and environmental performance through continuous improvement.
- Providing an effective injury management and return to work program for employees.
- Complying with applicable health, safety and environmental legal and other requirements.
- Providing workers with necessary health, safety, welfare and environment information, instruction, training and supervision to allow for the safe performance of their work.
- Making available for use, and using, health, safety, welfare and environment resources and processes to implement and maintain the requirements of this Policy and associated health, safety, welfare and environment management systems.
- Verifying the availability and use of health, safety and welfare resources and processes.

Responsibilities of Workers:

- Workers have a responsibility to comply with the applicable legislation, this policy and associated health, safety and environment management systems. No work is to be undertaken without a clear understanding of a safe method that minimises the risk of injury or illness, plant or equipment damage and environmental harm.
- Workers must take reasonable care for their own health and safety and have an obligation to take reasonable care that their acts or omissions don't adversely affect themselves or the health and safety of others at the operation.
- Workers must also comply with any reasonable instruction given by Whitehaven Coal and cooperate with any reasonable policy or procedure relating to health or safety notified to them.

This policy applies to all sites managed by Whitehaven Coal and its subsidiaries, and to all workers, visitors and clients of Whitehaven Coal.

Date 29/10/12

Tony Haggarty
Managing Director

"If it's not safe, don't do it."

1 of 1

UNCONTROLLED COPY WHEN PRINTED. *REFER TO INTRANET FOR LATEST VERSION*